15 November, 2024
Version 1.1

Hilltip

SCRAPESTRIKER™



OWNER'S MANUAL

ScrapeStriker™ 1800 grader blade for pickups

This manual replaces all editions with an earlier date.

Table of contents

General information 3
Technical information 3
Safety 4
Operating the gader blade 4
Detachment and Attachment 5
Electro-hydraulic 12 V. 6
Refilling hydraulic oil 6
Greasing points. 7
Maintenance 7
Electrical schematics 8
Hydraulic schematics 9

General information

The ScrapeStriker™ 1800 is a blade installed in the back of the car, with a working width of 1,8m. The blade can be used for removing ice and roughening of the surface in the winter, and for leveling the ground in the summer. The blade is equipped with a pressure accumulator, which allows the blade to flex when hitting an obstacle.



Technical information

MODEL	1800
Width	1,8 m
Weight	70 kg
Height	25 cm

Safety

- Never perform cleaning, maintenance, or repairs on the blade while the car engine is running.
- Ensure no one is in the immediate vicinity of the device during use.
- Never reverse the car with the blade down.
- Use the grader blade only for removing ice and smoothing soft ground.
- Do not use the blade if it is damaged.
- Always perform repairs on the equipment according to the manufacturer’s instructions.
- Use the equipment only for the purposes intended by the manufacturer.
- Do not make any structural modifications to the equipment without the manufacturer’s approval.
- Use only manufacturer-approved spare parts.
- Use the grader blade only for removing ice and smoothing soft ground.
- Do not remove or cover warning stickers and other safety equipment.

Operating the grader blade

Lower the blade while the car moves slowly forward by pressing the blade-down button until the blade no longer lowers. When driving longer distances with the blade down, it is recommended to press the blade down periodically to maximize cleaning power.

The blade rises by pressing the blade-up button for a few seconds.

NOTE! When reversing the car, always raise the blade (automatic lifting when reversing is available as an option).

Detachment and Attachment

If necessary, the blade can be removed as follows:

1. Lower the blade without pressing it against the ground.
2. Remove the bolts of the lower pivot pins of the blade and pull the pins out.
3. Raise the blade attachment arms.

Fastening takes place in reverse order.

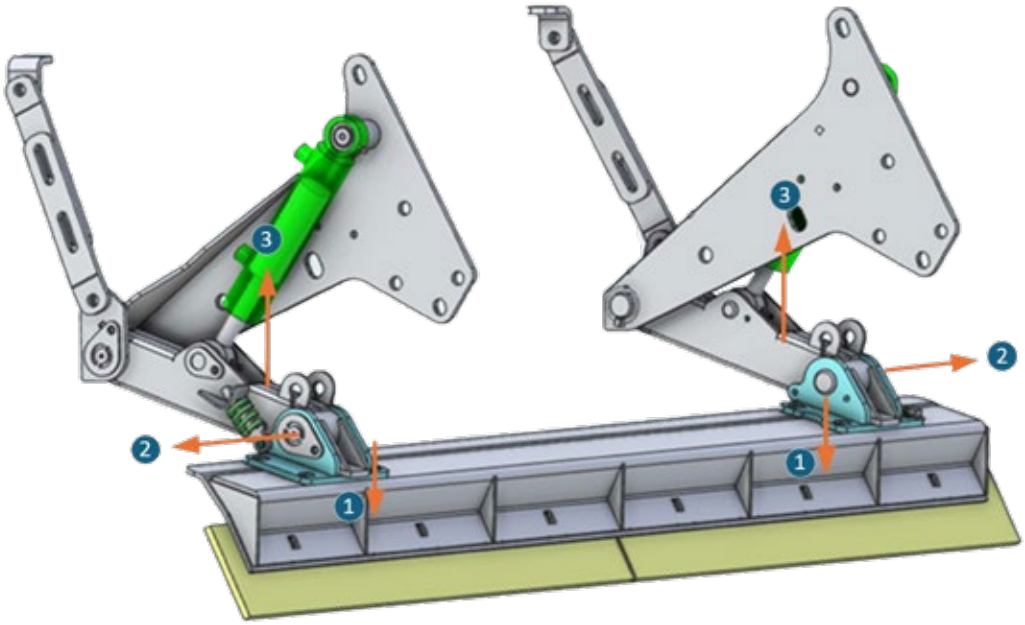

Electro-Hydraulic 12 V

In the electro-hydraulic version, the rear blade is moved with electro-hydraulics. In this case, a separate electro-hydraulic unit is installed in the vehicle, consisting of a 1.5 kW electric motor and an oil tank (oil volume 1.5 L).

Refilling Hydraulic Oil

Electro-Hydraulic Grader Blade:

The hydraulic oil reservoir is part of the pump unit located at the rear of the vehicle.

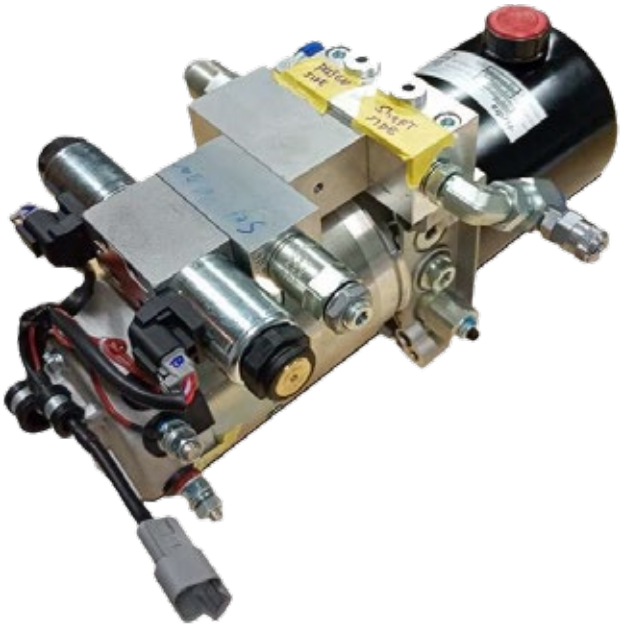

Greasing points

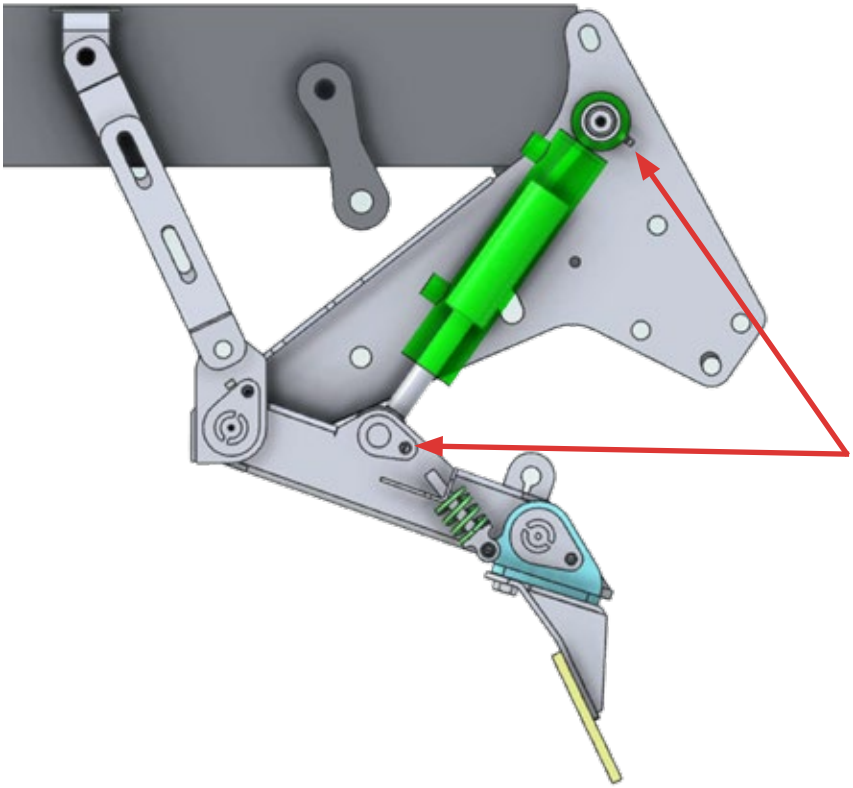

Maintenance

Do not perform any maintenance while the vehicle's engine is running.

Before each use:
- Ensure that the grader blade lock is engaged.

Weekly during the operating season:
- Grease the nipples on the grader blade (4 in total).
- Check the condition of the blade and ensure the fastening bolts are tight.
- Inspect the condition of the warning labels.

After the operating season:
- Clean the grader blade and treat the metal surfaces with protective oil.
- Check the tightness of bolts and hydraulic connections.
- Check the condition of the hydraulic hoses of the undercarriage.
- Oil change (electro-hydraulic version)
- Hydraulic oil, ISO 22

Electrical schematics

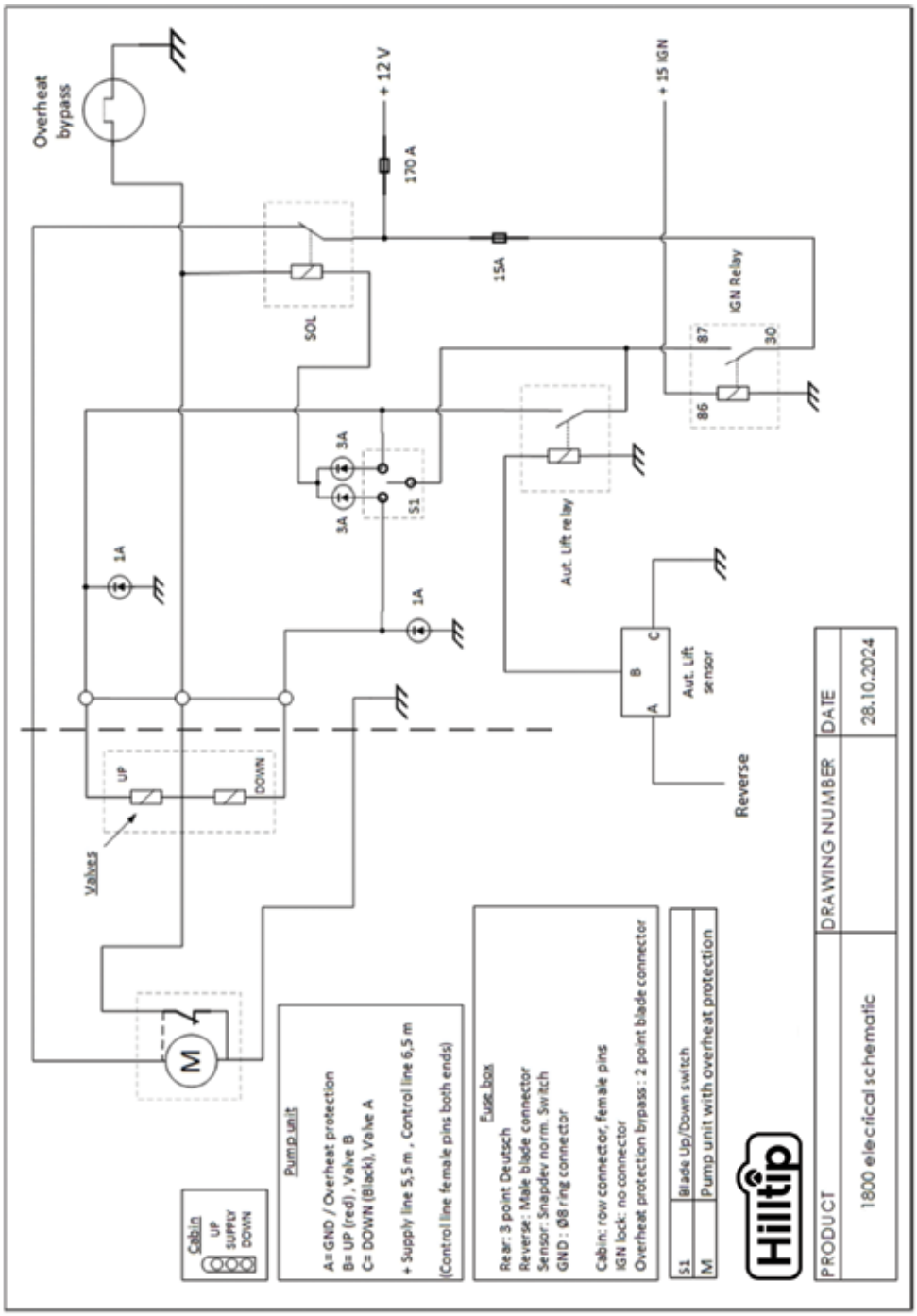

Hydraulic schematics

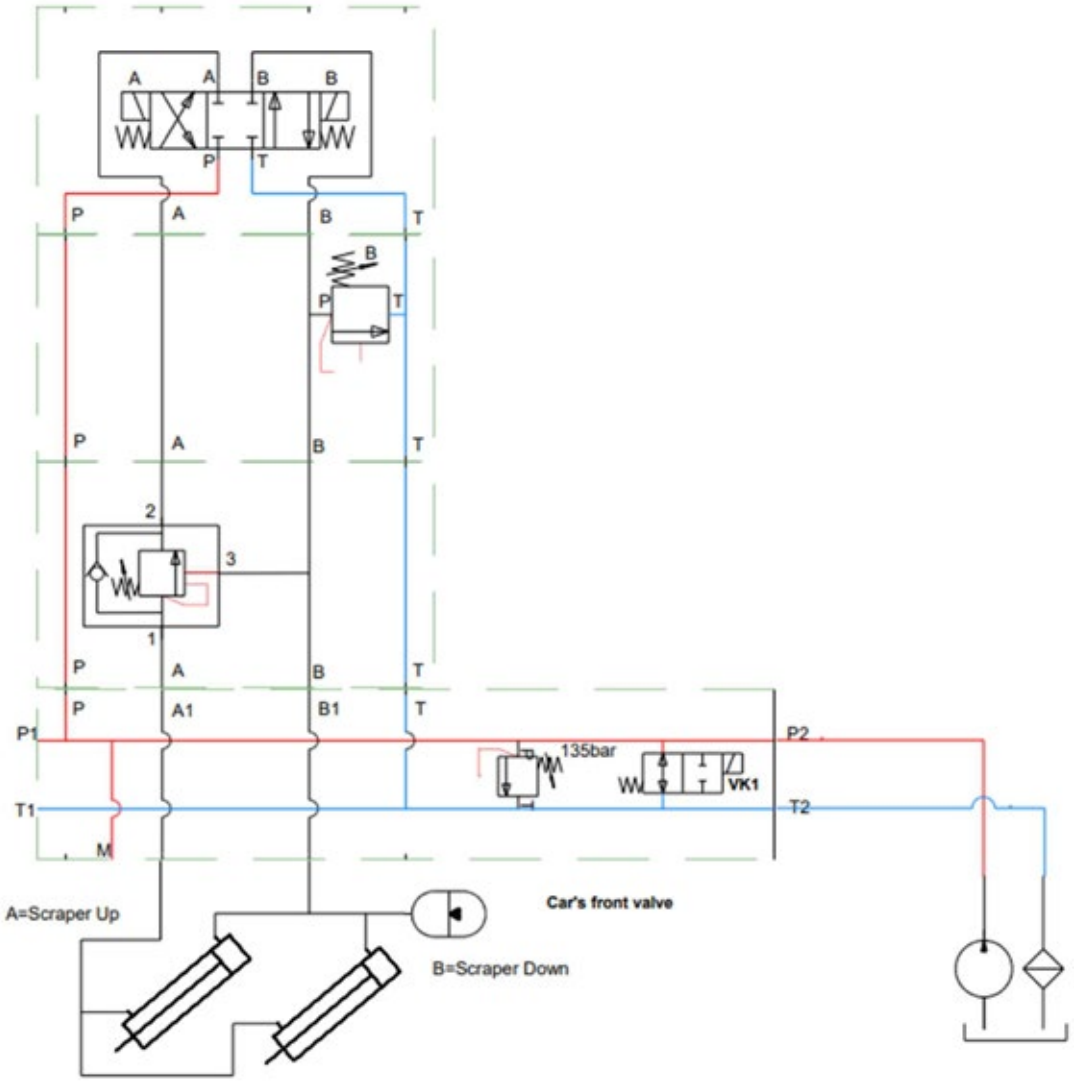

Oy Hilltip Ab
Pukkisaarentie 6
68600 Pietarsaari
Finland

+358 50 5983 026

www.hilltip.com
info@hilltip.com

Construction, specifications and other details are subject to change without notice.